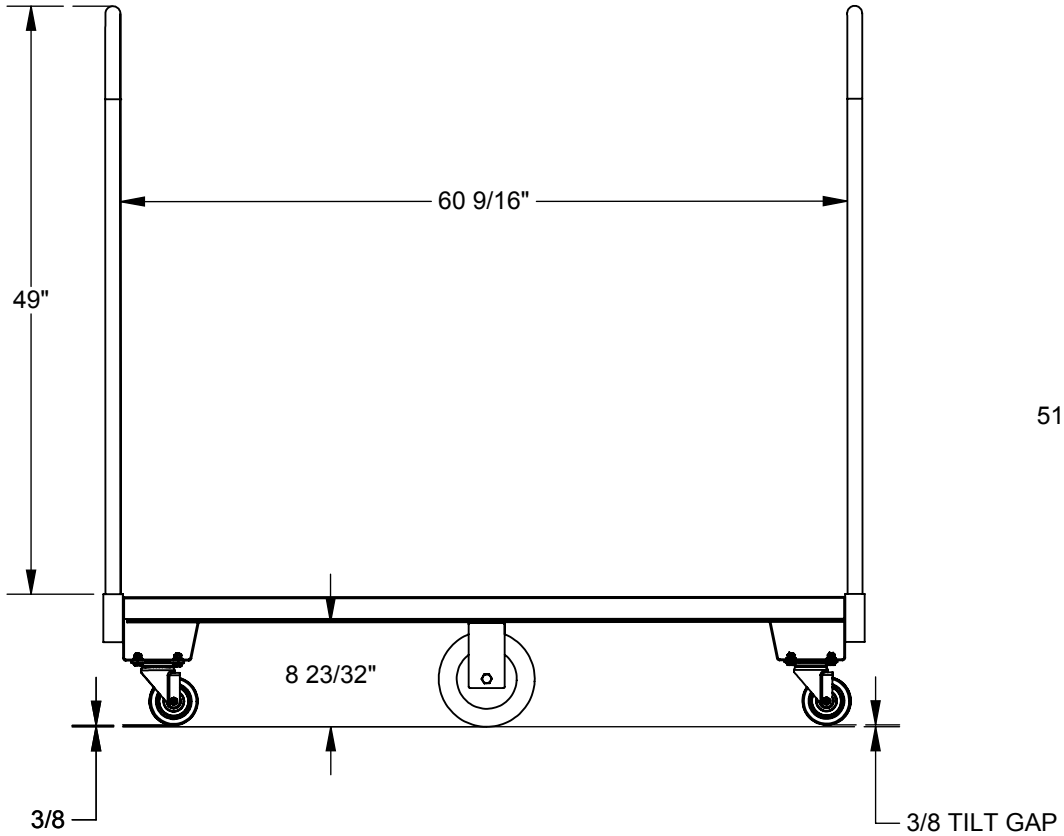

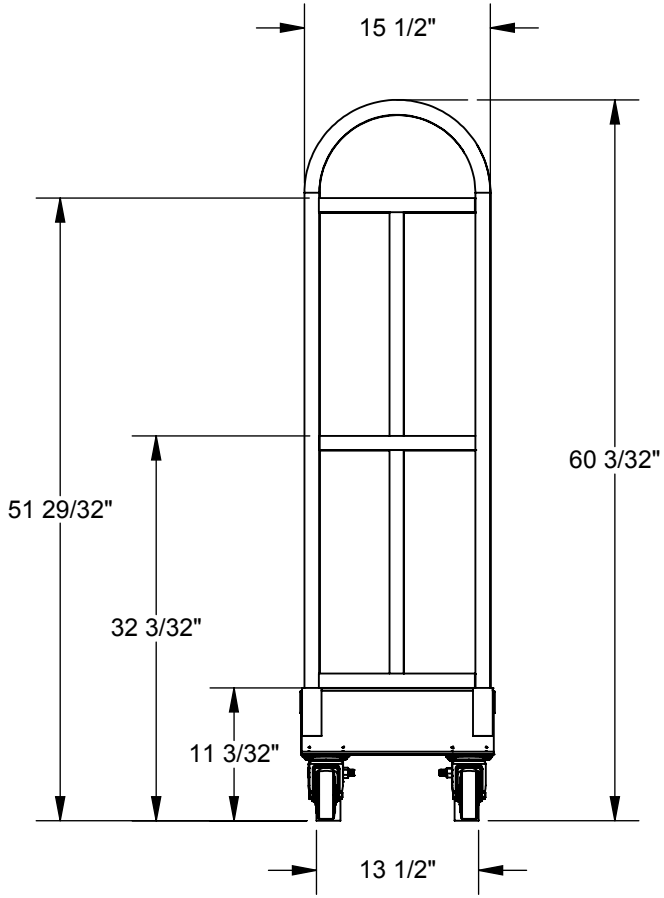

NOTE: DIMENSIONS ARE FOR REFERENCE PURPOSES ONLY AND MAY VARY ON ACTUAL PRODUCT

PROPRIETARY

THIS DRAWING IN ALL PARTICULARS IS WESCO INDUSTRIAL PRODUCTS INC. PROPERTY. ALL RIGHTS OF DESIGN, INVENTION OR USE OF ARE RESERVED.

	NAME	DATE
DRAWN	XXX	MM/DD/YY
CHECKED		
ENG APPR.		

TOLERANCES

UNLESS OTHERWISE SPECIFIED
DIMENSIONS ARE IN INCHES
FRACTIONAL ± 1/64
ANGULAR: ±1.5°
TWO PLACE DECIMAL ±0.01
THREE PLACE DECIMAL ±0.005

WESCO®
Manufacturers of Material Handling Equipment Since 1948
LANSDALE, PA 19446 PH: 215-699-7031

TITLE: STEEL TREAD U-BOAT

PROJECT: 273291

SIZE	DWG. NO.	REV
A	273291	-

SCALE: 1:16	WEIGHT: 97 lb.	SHEET 1 OF 1

SIZ A | SCALE 1:16 | DWG. NO. 273291 | RE V | SHEET 1 OF 1

5 4 3 2 1