272017

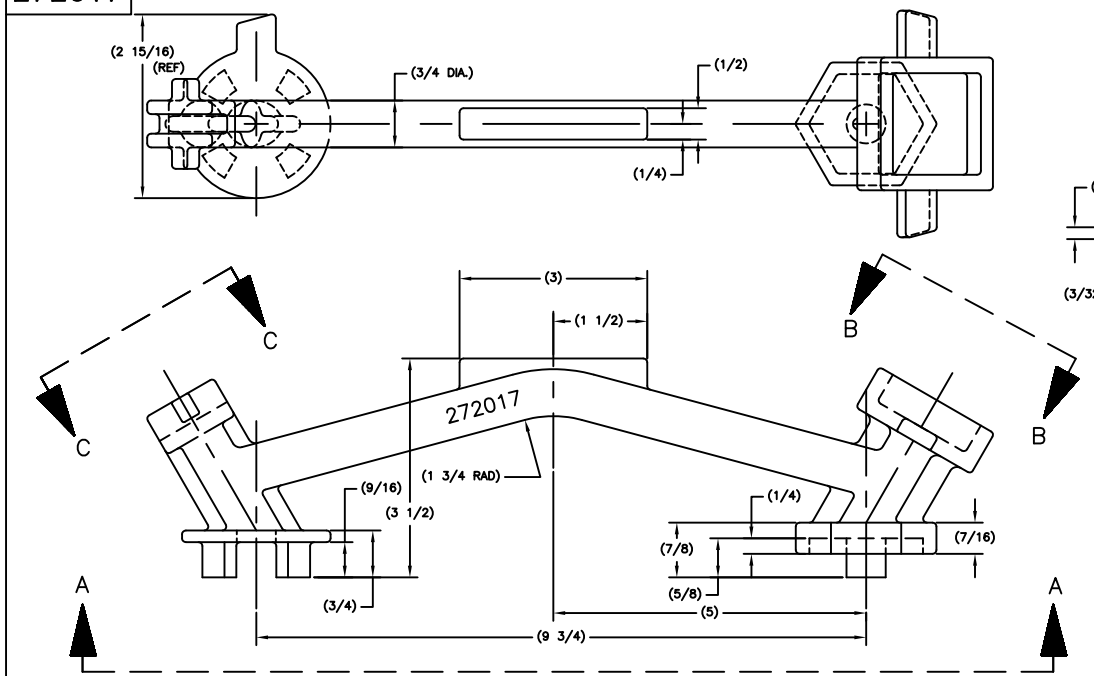

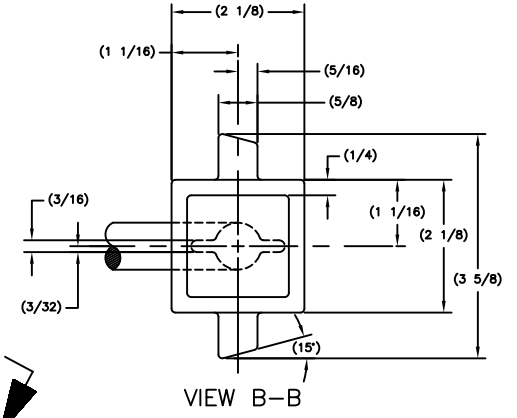

VIEW B–B

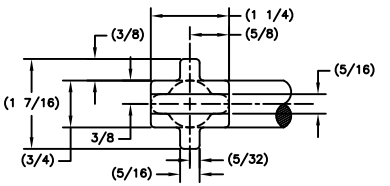

VIEW C–C

FEATURES:

- HEAVY DUTY CAST IRON CONSTRUCTION.
- OPEN MOST PLUGS AND BUNG NUTS,
- MALE & FEMALE, STEEL & PLASTIC.
- IRON ALLOY WILL NOT CHIP OR BEND IN NORMAL USE.
- PROTECTS KNUCKLES.
- HANDLES BUNG PATTERNS 1, 2, 3, & 4.

MINIMUM ORDER QTY. 3

WEIGHT: 4 LBS.

BOXED: YES X NO ___

BOXED SIZE: 14"x 3–¾" x 3–¾" PER PIECE.

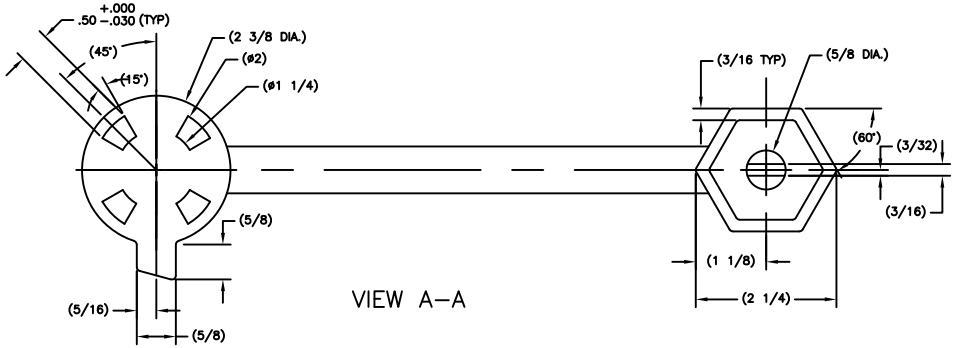

VIEW A–A

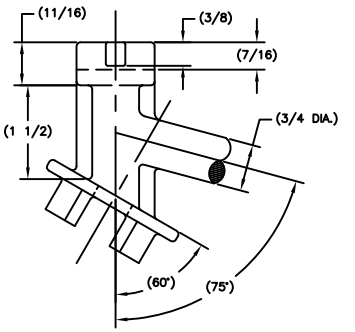

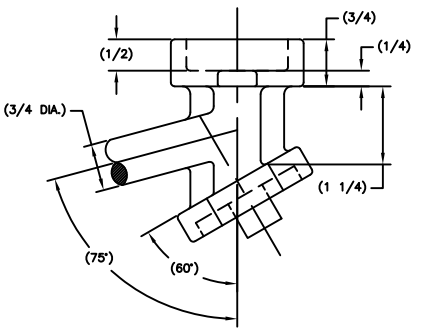

THIS DRAWING IN ALL PARTICULARS IS WESCO INDUSTRIAL PRODUCTS INC. PROPERTY. ALL RIGHTS OF DESIGN, INVENTION OR USE OF ARE RESERVED.

REV.	ECN & DATE	APP.
B	01–14–13 UPDATED ADDRESS	R W S

REVISIONS

WESCO INDUSTRIAL PRODUCTS INC.
NORTH WALES PENNA. 19454

PART NAME: BUNG NUT WRENCH (UNIVERSAL WRENCH)

DRAWN: RDS 02–20–06
CHECKED:
APP. ENGR.
SCALE: 1:2

TOLERANCE UNLESS OTHERWISE SPECIFIED

FRACTION	3 PLACE DECIMAL	2 PLACE DECIMAL
± 1/64	± .005	± .01

ANGULAR ± 1–1/2° SHEET 1 OF 1

BREAK ALL SHARP EDGES AND REMOVE ALL BURRS

B– 272017 REV B