054206

TOP EXTENSIONS FOR 410 & 450 MODELS

- For Cobra Lite Hand Trucks, 410 and 450 series models only.
- Factory Installed.
- Top handle height is 52".
- Vinyl coated top extensions available.

P/N	**054206**
Model:	52UF
Weight:	2 lbs

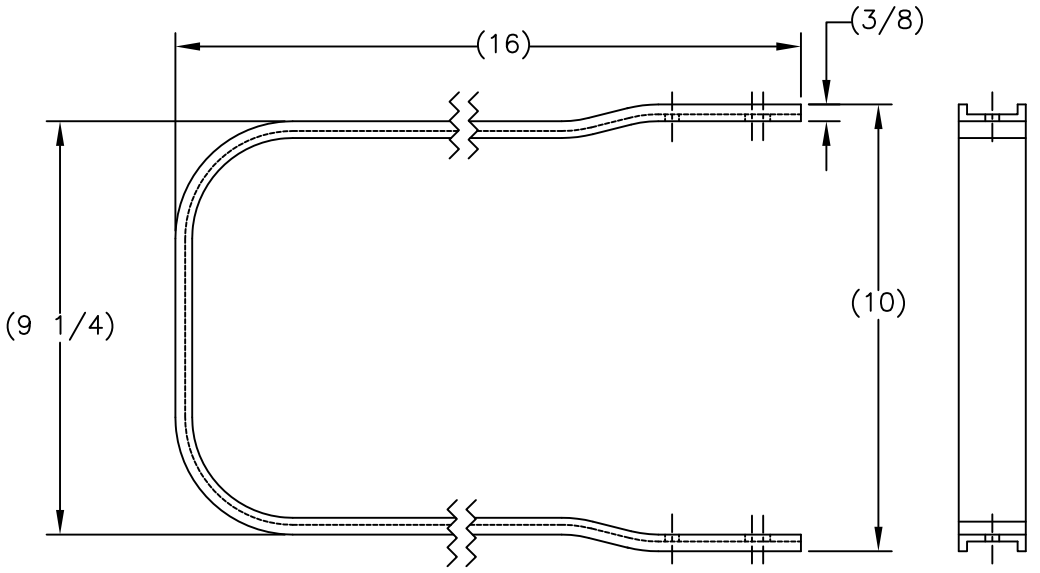

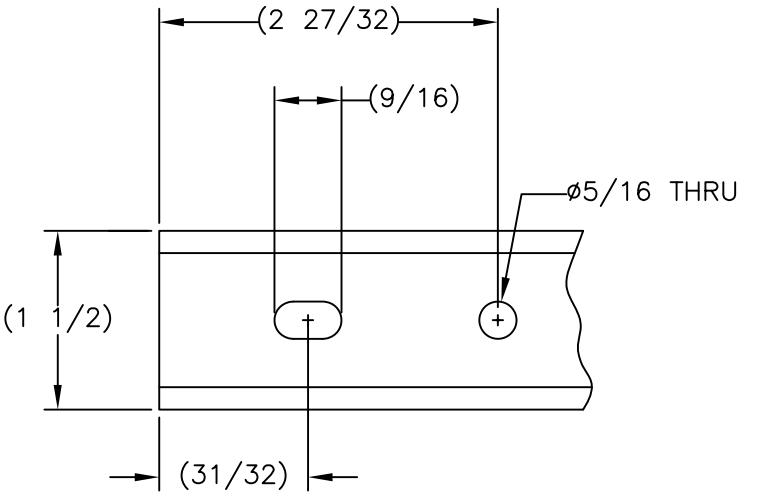

THIS DRAWING IN ALL PARTICULARS IS WESCO INDUSTRIAL PRODUCTS INC. PROPERTY. ALL RIGHTS OF DESIGN, INVENTION OR USE OF ARE RESERVED.

APP	REVISIONS	WESCO INDUSTRIAL PRODUCTS INC. NORTH WALES PENNA. 19454
ECN & DATE		PART NAME: 52" Top Extension
REV.		TOLERANCE UNLESS OTHERWISE SPECIFIED: FRACTION ± 1/64; 3 PLACE DECIMAL ± .005; 2 PLACE DECIMAL ± .01; ANGULAR ± 1-1/2°; BREAK ALL SHARP EDGES AND REMOVE ALL BURRS
		SHEET 1 OF 1
		DRAWN: / CHECKED: / APP. ENGR. / SCALE:
		B– 054206 REV